WINTERS Instruments

Excellence Since 1953

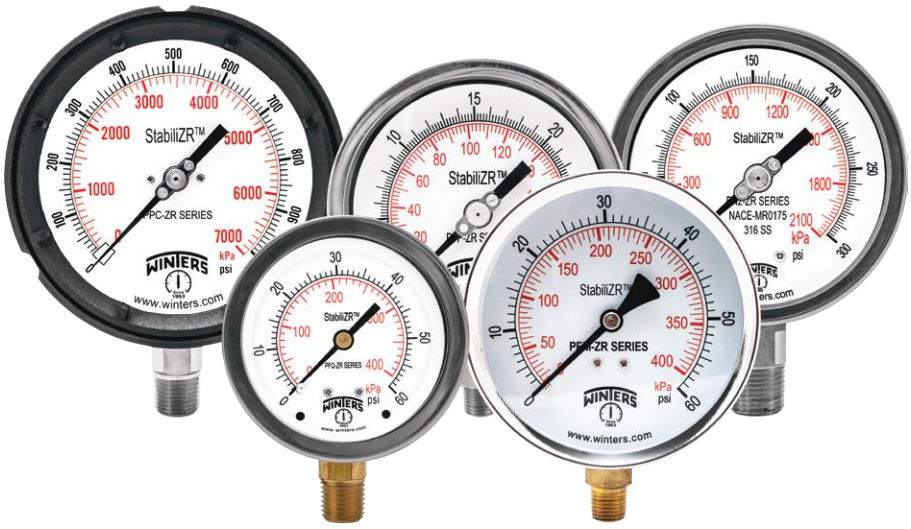

StabiliZR® Dampened Movement

StabiliZR®
power

WINTERS INSTRUMENTS
MANUFACTURER OF INDUSTRIAL INSTRUMENTATION

www.winters.com

StabiliZR® Gauges

Winters' StabiliZR® Solution

StabiliZR® gauges are dry gauges that come with a StabiliZR® dampened movement that eliminates pointer flutter caused by vibration and pulsation. This makes pressure reading much easier. No more worries of fill fluid leaking and compatibility issues with the process media. Gauges can easily be serviced without the hassle of draining and then refilling the case with fill fluid.

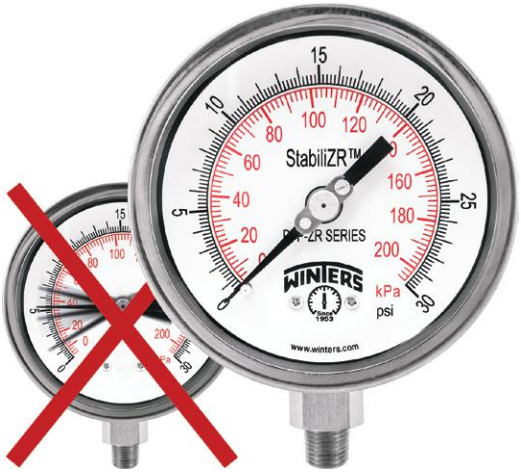

StabiliZR®:

- ✓ **Dampens vibration and pulsation**
- ✓ **Eliminates leaks and discolouration**
- ✓ **Can be used at higher temperatures than glycerin filled gauges**
- ✓ **Provides ease in reading**
- ✓ **Reinforced, lightweight design**

How it works

The pointer shaft is extended through the back of the movement with a small flat paddle affixed to the end of the shaft. A stainless steel cap filled with silicone is pressed over the end of the shaft, covering the paddle. This creates enough resistance to dampen the pointer and movement just as if the gauge is liquid filled, but without the concerns.

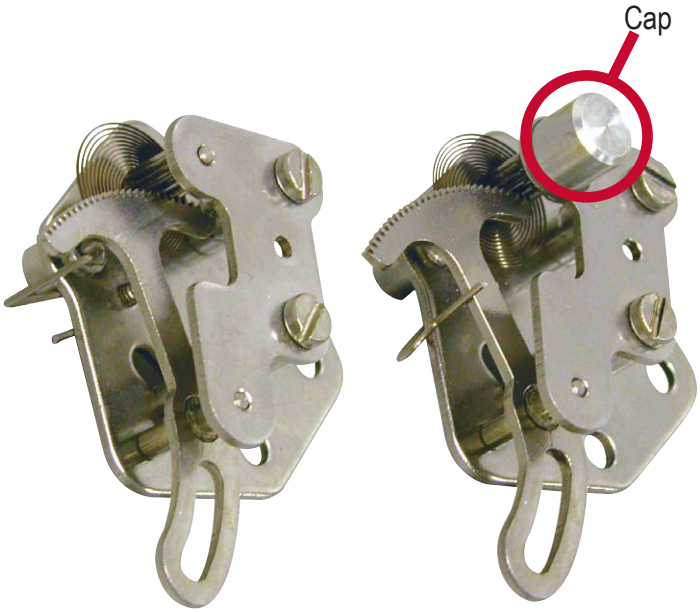

Standard Movement StabiliZR® Movement

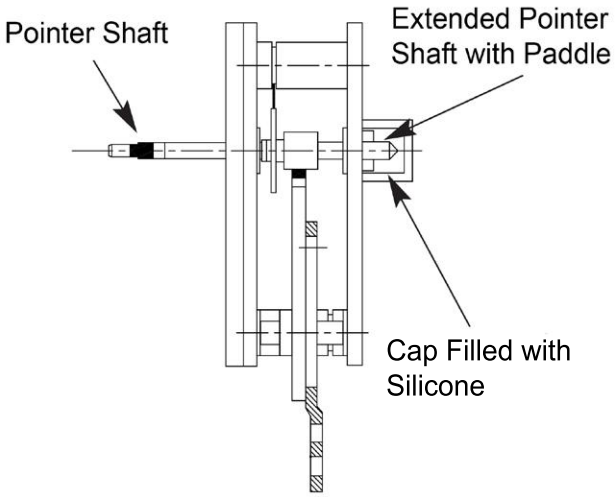

StabiliZR™ Movement

StabiliZR® Movement is available on the following Winters gauges:

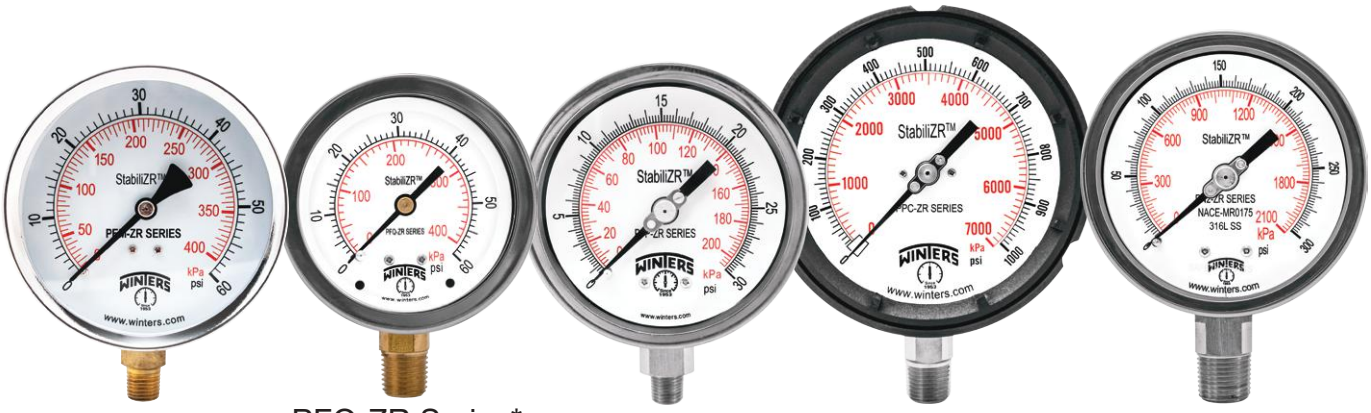

PEM-ZR Series* PFQ-ZR Series* PFP-ZR Series PPC-ZR Series* PN2-ZR Series

What customers are saying about the StabiliZR® vibration dampening gauges:

"It is one of the best product ideas I have seen .... all liquid filled gauges leak eventually. This is truly something new and better"
- Montgomery, Alabama, USA

"It quite simply is a better mousetrap, truly innovative. Solved age old problem of leaking gauges."
- Toronto, Ontario, Canada

"Lightweight gauges are a very clear advantage"
- Amman, Jordan

Testing Standards

250,000 cycle tests were performed on StabiliZR® and glycerin filled gauges side-by-side. The performance of the StabiliZR® gauges were comparable to those of the glycerin filled gauges.

Reference Gauge Pressure (psi)	Winters PFQ-ZR Series (% accurate)	Winters PFQ (glycerin filled) (% accurate)
100	**99.6**	99.8
200	**99.3**	99.2
300	**99.8**	99.3
400	**99.3**	99.6
	Avg. 99.5%	Avg. 99.5%

* **WARNING:** This product can expose you to chemicals including lead, which is known to the State of California to cause cancer and birth defects or other reproductive harm. For more information go to www.P65Warnings.ca.gov.

WINTERS INSTRUMENTS

MANUFACTURER OF INDUSTRIAL INSTRUMENTATION



Winters Instruments is a global manufacturer of premium quality pressure and temperature instrumentation, with distribution partners in over 90 countries. Please contact us for your nearest Regional Manager.

Corporate - Canada
Winters Instruments
121 Railside Road
Toronto, Ontario
M3A 1B2
Tel: 416-444-2345
1-800-WINTERS
sales@winters.com

Canada - Edmonton
Winters Instruments
7503 Girard Road, #100
Edmonton, Alberta
T6B 2H2
Tel: 403-723-6645
1-800-WINTERS
sales@winters.com

USA - Houston
Winters Instruments
5400 W. Sam Houston Pkwy N.
Houston, Texas
77041
Tel: 281-880-8607
1-800-WINTERS
usasales@winters.com

Europe - Middle East - Africa
Winters Instruments
Dubai Airport Free Zone
6WB G50
Dubai, United Arab Emirates
Tel: 971-4295-9177
emeasales@winters.com

Asia - Shanghai
Winters Instruments
Room 203, Building 8,
No. 471, Guiping Road
Shanghai
200233
China
Tel: 86-21-6104-2610
asiasales@winters.com
www.wintersasia.com

Latin America
Winters Instruments
Lamadrid 121
Los Troncos del Talar,
B1608CEC
Buenos Aires, Argentina
Tel: 54-11-4715-3036
latinsales@winters.com
www.winters.com.ar

Distributed by:

Download Winters' literature at www.winters.com

Winters Instruments is ISO 9001:2015 Registered

02/25
MKT1356